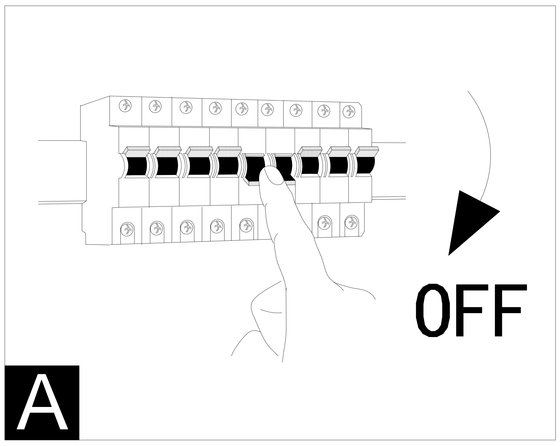

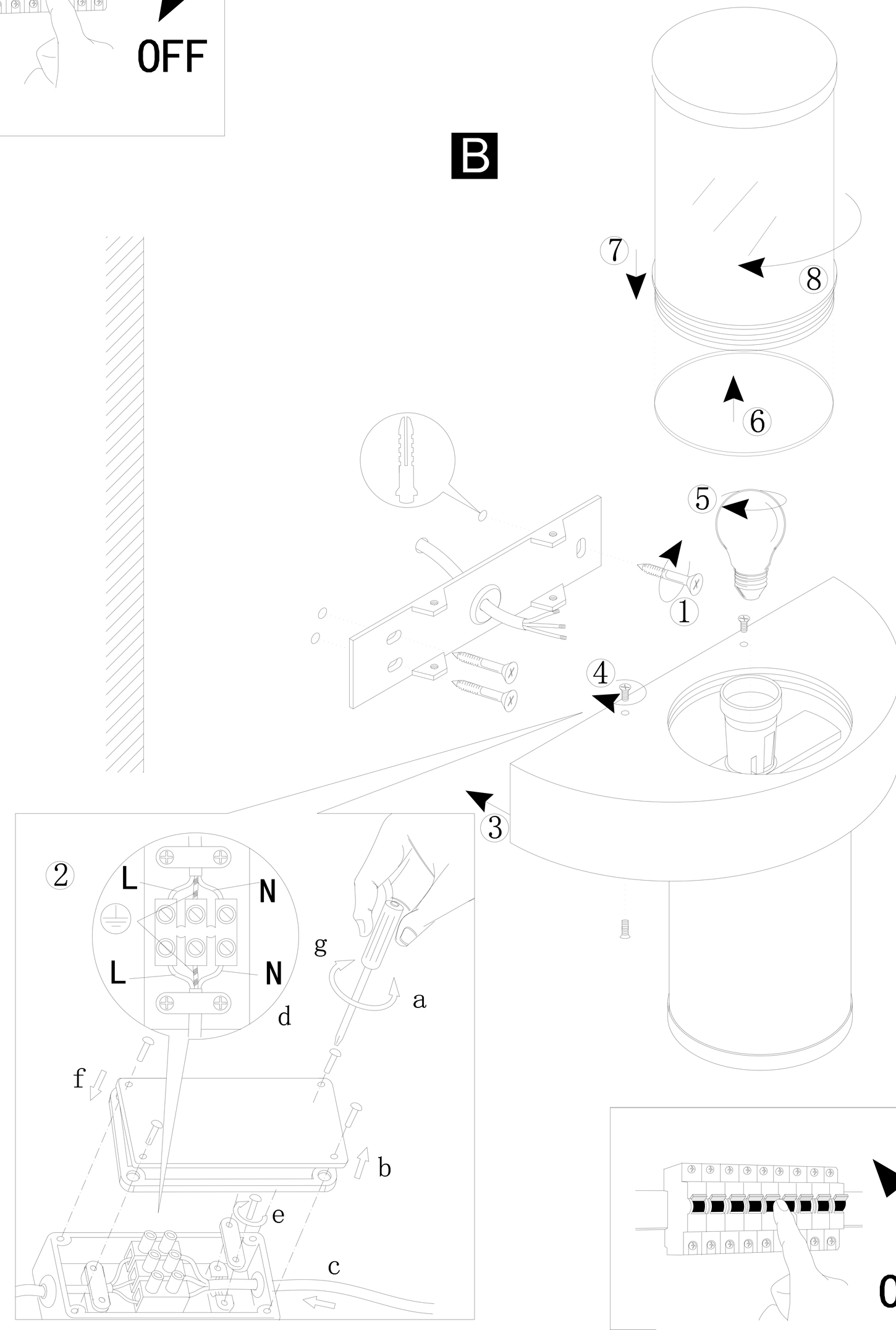

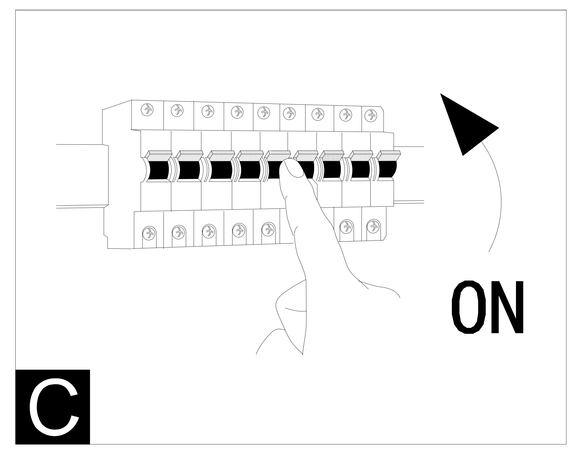

BLA86541-1